REV.	DESCRIPTION OF CHANGE	INITIALS	DATE
0	INITIAL ISSUE		
1	TITLE BLOCK UPDATED	BJC	30/07/2014

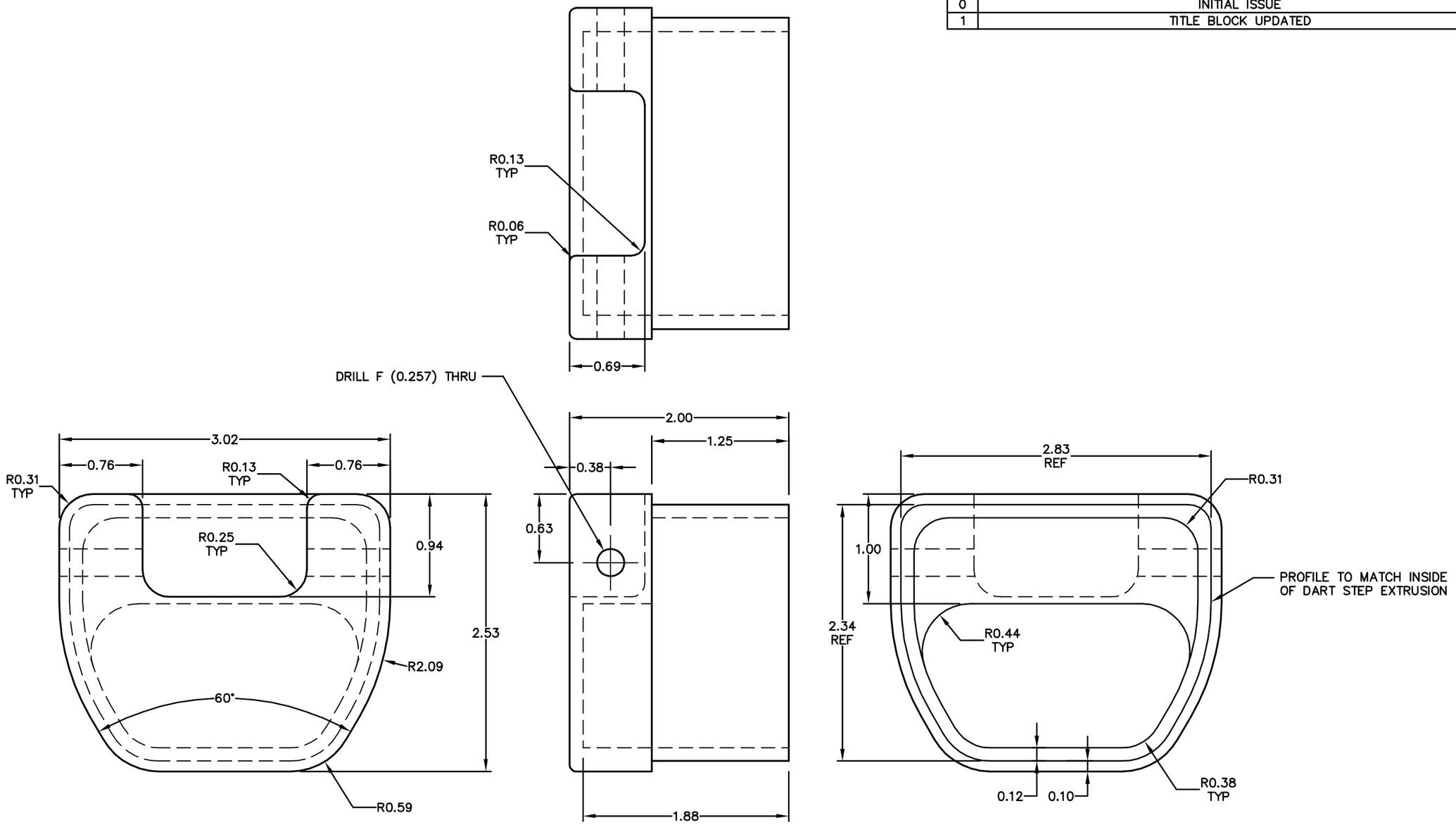

01 CAP

QTY	PART NO.	ITEM	DESCRIPTION	MATERIAL	MATERIAL SPEC	STOCK SIZE
1	82783–01	01	CAP	6061–T6 ALUMINUM	QQ–A–200/8	2 X 3 BAR

LIST OF MATERIALS

NOTES

1. REMOVE ALL BURRS AND BREAK SHARP EDGES.
2. THOROUGHLY DEGREASE, ALODINE, EPOXY PRIME AND POLYURETHANE PAINT ALL ALUMINUM PARTS PRIOR TO ASSEMBLY.
   ALTERNATE: THOROUGHLY DEGREASE AND POWDER COAT ALL ALUMINUM PARTS PRIOR TO ASSEMBLY.
   ALTERNATE: ANODIZE ALL ALUMINUM PARTS IN ACCORDANCE WITH MIL–A–8625F, TYPE III.

— NOTICE —
THIS DRAWING CONTAINS INFORMATION AND DATA WHICH IS PROPRIETARY TO AERO DESIGN LTD. THIS DRAWING, OR ANY PORTION THEREOF, MAY NOT BE REPRODUCED, COPIED, OR DUPLICATED IN ANY MANNER, NOR USED FOR MANUFACTURING WITHOUT THE WRITTEN CONSENT OF AERO DESIGN LTD. BY ACCEPTING THIS DRAWING FOR REFERENCE, THE RECIPIENT AGREES TO HOLD AERO DESIGN LTD. HARMLESS FROM THE USE, OR MISUSE, OF THIS DRAWING OR THE INFORMATION CONTAINED THEREON.

APPROVALS		DATE
DRAWN:	JEFF CLARKE	19 JAN 2011
CHECKED:	E. BURGOIN	

UNLESS OTHERWISE SPECIFIED DIMENSIONS ARE IN INCHES.
TOLERANCES ON:

DECIMALS		ANGLES
X.XXX	±0.010	±1/2°
X.XX	±0.03	
X.X	±0.1	

AERO DESIGN LTD.
9888A MALASPINA ROAD
POWELL RIVER, BC, CANADA, V8A 0G3
TEL: 604.483.2376 www.aerodesign.ca

EUROCOPTER AS350 / AS355 SERIES
DART CABIN STEP MODIFICATION
CAP FABRICATION

SCALE 1 : 1	DWG. SIZE	DWG. NO.	REV.
SHEET 1 OF 1	A3	82783	1